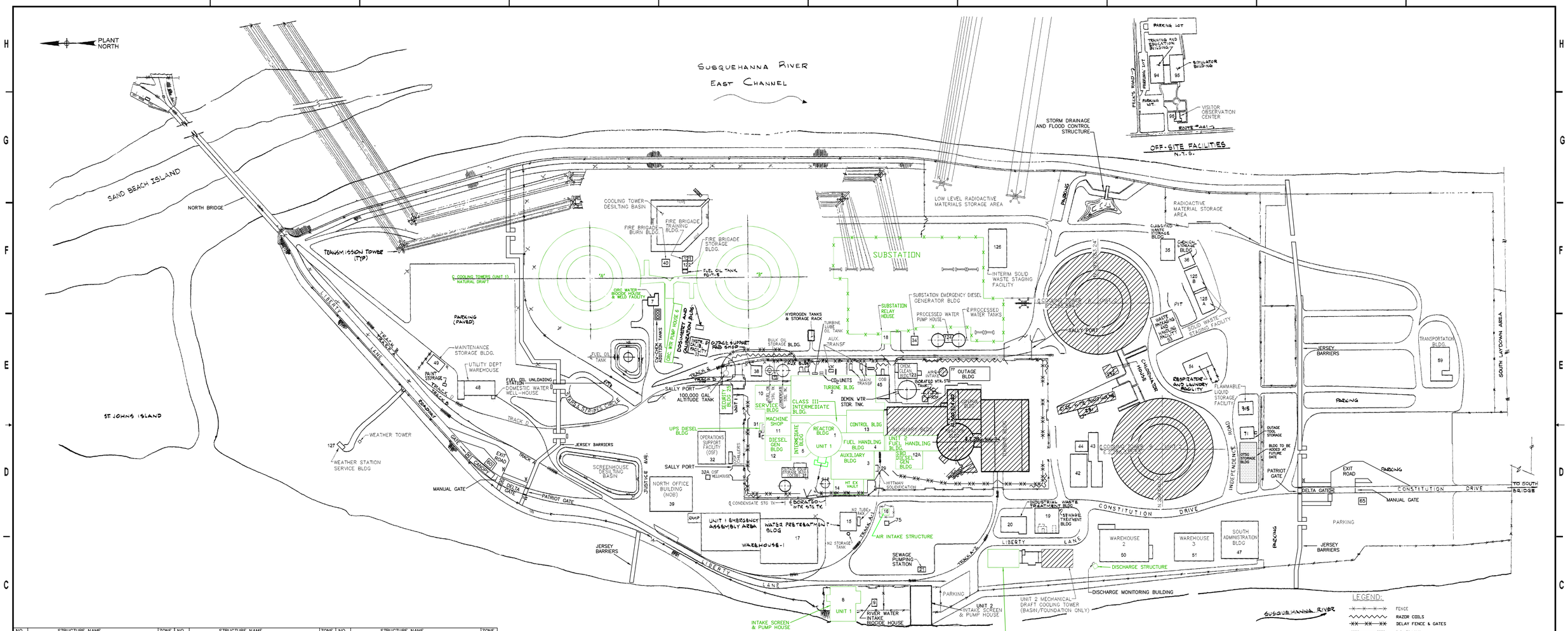

NO	STRUCTURE NAME	ZONE	NO	STRUCTURE NAME	ZONE	NO	STRUCTURE NAME	ZONE
1	REACTOR BUILDING	D-6	47	SOUTH ADMINISTRATIVE BUILDING	C-3	NA	TMI-2 INTAKE SCREEN AND PUMP HOUSE	C-5
2	TURBINE BUILDING	E-5	48	UTILITY DEPARTMENT WAREHOUSE	E-8	NA	WEATHER TOWER	D-8
3	AUXILIARY BUILDING	D-5	49	MAINTENANCE STORAGE BUILDING	E-8	NA	DISCHARGE MONITORING BUILDING	C-4
4	FUEL HANDLING BUILDING	D-5	50	WAREHOUSE #2	C-3	NA	OSTG STORAGE BUILDING	D-3
5	INTERMEDIATE BUILDING	D-6	51	WAREHOUSE #3	C-4			
6	CIRCULATING WATER PUMP HOUSE	E-7	53	WASTE HANDLING/PACKAGING FACILITY	E-3			
7	ORC WATER BIOCIDE HOUSE AND WELD FACILITY	F-7	54	RESPIRATOR & LAUNDRY FACILITY (RLM)	E-3			
8	INTAKE SCREEN & PUMP HOUSE	C-5	59	TRANSPORTATION BUILDING	E-6			
9	RIVER WATER INTAKE BIOCIDE HOUSE	C-5	60	ENVIRONMENTAL ENCLOSURE	E-4			
10	SERVICE BUILDING	E-6	65	ENVIRONMENTAL ENCLOSURE	D-3			
11	MACHINE SHOP	D-6	71	OUTAGE TOOL STORAGE	D-2			
12	DIESEL GENERATOR BUILDING	D-6	73	BULK OIL STORAGE BLDG.	E-6			
12A	SBO DIESEL GENERATOR BUILDING	D-5	75	EMPTY BUILDING	D-5			
13	CONTROL BUILDING	E-5	77	OUTAGE BUILDING	E-4			
14	HEAT EXCHANGE VAULT	D-5	94	TRAINING CENTER	H-3			
15	WATER PRETREATMENT BUILDING	D-5	95	SIMULATOR BUILDING	H-3			
16	AIR INTAKE STRUCTURE	D-5	96	VISITOR (OBSERVATION) CENTER	G-3			
17	WAREHOUSE #1	D-6	97	SOUTH BRIDGE	D-1			
18	SUBSTATION RELAY HOUSE	E-5	120	NORTH BRIDGE	G-10			
19	SEWAGE TREATMENT BUILDING	D-4	121	FIRE BRIGADE — TRAINING BUILDING	F-7			
20	INDUSTRIAL WASTE TREATMENT BLDG.	D-4	122	FIRE BRIGADE STORAGE BUILDING	F-7			
21	SEWAGE PUMPING STATION	D-8	123	CHEMICAL CLEANING BUILDING	E-5			
25	SECURITY BUILDING (PROCESSING CENTER)	E-5	124	PROCESSED WATER PUMP HOUSE	F-5			
31	UPS DIESEL BUILDING	D-6	125	SOLID WASTE STAGING FACILITY (BLDG. A & B)	F-4			
32	OPERATIONS SUPPORT FACILITY	D-6	126	INTERIM SOLID WASTE STAGING FACILITY	F-4			
32A	OSF WELL HOUSE	D-6	127	WEATHER STATION SERVICE BUILDING	D-9			
33	INSTRUMENT CALIBRATION FACILITY	E-6	129	HITTMAN SOLIDIFICATION	D-5			
34	SUBSTATION EMERG. DIESEL GENERATOR BUILDING	E-5	315	FLAMMABLE LIQUID STORAGE FACILITY	E-3			
35	CLASSIFIED WASTE STORAGE BUILDING	F-3	332	DISCHARGE STRUCTURE	C-4			
36	CHEMICAL STORAGE BLDG.	F-3	NA	COOLING TOWER DESILTING BASIN	F-6			
37	OUTAGE EQUIPMENT STORAGE BUILDING	D-6	NA	DOMESTIC WATER WELL-HOUSE	E-8			
38	OUTAGE SUPPORT FABRICATION SHOP	E-6	NA	DOSIMETRY AND CALIBRATION BUILDING	E-6			
39	NORTH OFFICE BUILDING	D-7	NA	FUEL OIL UNLOADING STATION	E-7			
40	FIRE BRIGADE — BURN BUILDING	F-7	NA	HYDROGEN STORAGE RACK AND FOUNDATION	E-6			
42	MAINTENANCE TRAINING BUILDING	D-4	NA	NORTH BRIDGE	G-9			
43	MAINTENANCE TRAINING BUILDING	D-4	NA	PAINT STORAGE	E-8			
44	MAINTENANCE TRAINING BUILDING	D-4	NA	SCREEN HOUSE DESILTING BASIN	D-7			
45	OPERATIONS OFFICE BUILDING	E-5	NA	SOUTH BRIDGE	D-1			

LEGEND:

- FENCE
- RAZOR COILS
- DELAY FENCE & GATES
- R.R. TRACKS
- TMI-2 STRUCTURES NOT ASSOCIATED WITH OPERATION OF TMI-1 (NOT IN SCOPE FOR LICENSE RENEWAL)
- BUILDING TO BE ADDED AT A FUTURE DATE.

NOTES:

1. STRUCTURES OUTLINED IN GREEN ARE IN SCOPE FOR 10CFR54.4.
2. THIS DRAWING IS BASED ON DRAWING 1E-120-01-001 REVISION 64.

TABLE OF ADDITIONS & CHANGES

NO	DATE	DESCRIPTION	REV'D	CHK'D	APP'D
0	01 03 08	INITIAL ISSUE FOR LICENSE RENEWAL	MK	MED	DPC

MECHANICAL

LICENSE RENEWAL DRAWING
SITE PLAN

THREE MILE ISLAND NUCLEAR GENERATING STATION

THREE MILE ISLAND
AmerGen

SHEET 1 OF 1 | LR-1E-120-01-001 | 0

DWG NO. LR-1E-120-01-001 SH. 1

VALVES

TYPES

- GATE
- HOSE GATE
- GLOBE
- HOSE GLOBE
- BALL
- PLUG
- BUTTERFLY
- NEEDLE
- DIAPHRAGM PACKLESS
- BELLOWS SEAL PACKLESS
- SWING-CHECK
- STOP-CHECK
- ANGLE STOP-CHECK
- LIFT-CHECK
- BALL-CHECK
- TILTING DISC-CHECK
- SPRING CONTROLLED-CHECK
- SPRING CONTROLLED BALL-CHECK
- AUTOMATIC BALL DRIP-CHECK
- HORIZONTAL DRIP-CHECK
- ANGLE DRIP-CHECK
- ANGLE
- ANGLE SAFETY OR RELIEF
- HOSE ANGLE
- CONTROL
- PRESSURE REGULATOR (INTERNAL PRESS. TAP)
- PRESSURE REGULATOR (EXTERNAL PRESS. TAP)
- PRESSURE REGULATING VALVE SPRING CONTROLLED, SELF-CONTAINED
- 3-WAY
- 4-WAY
- STEM LEAKOFF
- VACUUM BREAKER
- IN-LINE RELIEF
- POP-OFF RELIEF
- DEAD-WEIGHT RELIEF
- FLOW & PRESSURE CONTROL
- MAIN REHEAT STOP & INTERCEPT
- EXTENSION STEM THROUGH SHIELD WALL
- ED — VALVE STEM LEAKOFF TO EQUIPMENT DRAIN
- MES — ENGINEERED SAFEGUARD ACTUATED
- ED — VALVE STEM LEAKOFF TO EQUIPMENT DRAIN
- CONTROL VALVE
- VALVE NORMALLY OPEN
- VALVE NORMALLY CLOSED

VALVE FAILURE MODES

FC	FAILS CLOSED
FO	FAILS OPEN
FAI	FAILS AS IS

OPERATORS

- M — MOTOR OPERATOR
- S — SOLENOID OPERATOR
- DIAPHRAGM OPERATOR
- P — PISTON OPERATOR
- NON-RETURN VALVE WEIGHT OPERATOR
- H — HYDRAULIC OPERATOR
- FLOAT OPERATOR
- DIAPHRAGM OPERATOR WITH HANDWHEEL
- P — POWER OPERATOR

SPECIALTY

- Y-STRAINER
- PERMANENT STRAINER
- BATHTUB UNIT TEMPORARY STRAINER
- S — SINGLE BASKET STRAINER
- S S — DUPLEX STRAINER
- TEMPORARY STRAINER
- FLOW VENTURI, INSTRUMENT ORIFICE, OR CAVITATING VENTURI
- FLOW ELEMENT OR RESTRICTING ORIFICE
- ANNUBAR
- IN LINE SIGHT FLOW GLASS
- IN-LINE ROTATING FLOW DEVICE
- SPARGER
- T — TRAP
- F — FILTER
- SPRAY NOZZLE
- RUPTURE DISC
- TANK SCREEN STRAINER
- VALVE DISCHARGE TARGET
- BEARING
- EXPANSION JOINT
- INSTRUMENT AIR FILTER REGULATOR
- SPECTACLE BLIND
- RUPTURE DIAPHRAGM
- STRAIGHTENING VANE
- EXPANSION JOINT

EQUIPMENT

- HEAT EXCHANGERS OR COOLERS
- JET AIR EJECTOR OR EDUCTOR
- DESUPERHEATER
- TURBINE
- AGITATOR OR MIXER
- M — ELECTRIC MOTOR DRIVE
- T — TURBINE DRIVE
- TANK
- PRESSURE VESSEL
- COOLER
- BLOWER OR FAN
- POSITIVE DISPLACEMENT PUMP
- VACCUM PUMP OR COMPRESSOR
- CENTRIFUGAL PUMP
- VERTICAL PUMP
- SUMP PUMP
- VERTICAL PUMP (OPEN SUCTION BELL TYPE)
- AIR ACTUATED PUMP
- VERTICAL CENTRIFUGAL PUMP
- MISC. PUMP
- IN-LINE VERTICAL CIRCULATING PUMP
- ROTARY GEAR PUMP

HVAC

- RETURN OR TRANSFER AIR
- SUPPLY OR OUTSIDE AIR
- AIR FILTER PREFILTER
- AIR FILTER HEPA
- AIR FILTER CARBON
- REFRIGERANT FILTER
- CENTRIFUGAL FAN
- FAN W/INLET VORTEX DAMPER
- C — COOLING COIL
- R H C — COIL REHEATER
- A-HEPA FILTER
- C-CHARCOAL FILTER
- P-PREFILTER
- H — HEATING COIL
- R H — RADIANT HEATER
- EH C — ELECTRIC HEATING COOL
- D — DEMISTER
- DX — DIRECT EXPANSION COIL
- LOUVER
- TS THERMOSTAT
- H HUMIDSTAT
- TC TEMPERATURE CONTROLLERS
- FS FLOW SWITCH
- AXIAL FAN
- PROPELLER FAN
- AXIAL FAN WITH VORTEX DAMPER
- AIR WASHER
- LOUVER
- POWERED ROOF VENTILATOR
- SUPPLY OUTLET
- RETURN / EXHAUST INLET
- SUPPLY AIR DUCT
- EXHAUST OR RETURN AIR DUCT
- HUMIDIFIER
- POS — POSITION LIMIT SWITCH
- HIS — HAND INDICATING SWITCH
- P E — PNEUMATIC/ELECTRIC SIGNAL CONNECTOR
- ALARM IN CONTROL RM

-- DAMPERS --

- FAIL CLOSE TYPE DAMPER
- BACKDRAFT DAMPER
- DAMPER
- PARALLEL BLADE
- OPPOSED BLADE
- M — MOTOR OPERATED DAMPER
- G — GRAVITY
- FD — FIRE DAMPER
- DAMPER W/POSITIONER
- VD — MANUAL OPERATED VOLUME DAMPER

LINE

- PRIMARY PROCESS
- SECONDARY PROCESS
- AUXILIARY
- ALL OTHER
- PNEUMATIC SIGNAL
- HEAT TRACED (ELECTRICAL)
- S — HEAT TRACED (STEAM)
- CAPILLARY TUBING
- ELECTRICAL SIGNAL
- INSTRUMENT AIR
- DWG.NO.(A-1) — CONTINUING TO DWG.NO. AT GRID COORDINATE A-1
- DWG.NO.(A-1) — CONTINUING FROM DWG.NO. AT GRID COORDINATE A-1
- CHANGE OF LINE SPECIFICATION
- DIRECTION OF FLOW
- REDUCER
- FLANGED JOINT
- CAPPED LINE (BW)
- HOSE CONNECTION
- PIPE CAP
- VENT
- REMOVABLE SPOOL
- BLIND FLANGE
- FLEXIBLE HOSE
- ISOLATION & TEST CONNECTION
- PIPE PLUG
- DRAIN TO WASTE
- FLEXIBLE CONNECTOR

SYMBOL	LINE SPEC. NO.
A	900-1
B	600-1
C	400-1
D	300-1
E	150-1
F	150-2
G	125-1
H	125-2
J	150-F1
K	300-F1
L	50-1
M	300-2
N	150-3
P	C-1
Q	600-2
R	2500-2
S	125-3
T	2500-3
U	1500-1
V	CPVC
W	HCD
X	PVC
Y	FRP

FIRE PROTECTION

- HOSE REEL WITH HOSE
- FIRE HYDRANT
- DELUGE VALVE NORMALLY CLOSED)
- FLAME ARRESTER

MISCELLANEOUS

- S-I S-II — SEISMIC CLASS MARKER
- N-1 N-2 — NUCLEAR CLASS MARKER
- 7 — CONDENSER CONNECTION NUMBER
- AB — PIPE SPECIFICATION FLAG
- RB — REACTOR BUILDING
- HATCH PATTERN PLACED OVER ABANDONED PIPING/COMPONENTS

TABLE OF ADDITIONS & CHANGES

NO	DATE	DESCRIPTION	REV'D	CHK'D	APP'D
0	01 03 08	INITIAL ISSUE FOR LICENSE RENEWAL	T W	D P C	M A M

MECHANICAL

LICENSE RENEWAL SCOPING DRAWING
MECHANICAL SYMBOLS

THREE MILE ISLAND
AmerGen

SHEET 1 OF 1 | LR-302-001 | REV 0

DWG.NO. LR-302-001 SH. 1

INSTRUMENT IDENTIFICATION LETTERS			
	FIRST LETTER	SECOND LETTER	ADDITIONAL LETTERS
LETTER	PROCESS VARIABLE OR ACTIVATION	TYPE OR FUNCTION	ADDITIONAL FUNCTION
A		ALARM	ALARM
C	CONCENTRATION	CONTROL	CONTROL
D	DIFFERENTIAL		
E	ELECTRICITY	ELEMENT (PRIMARY)	
F	FLOW	FIRE	
G		GLASS	
H	HUMIDIDTY	HAND ACTUATED	HIGH
I		INDICATING	INDICATING
K	POSITION		
L	LEVEL	LEVEL	LOW
M	MOTION	METER (INTEGRATING)	METER (INTEGRATING)
P	PRESSURE	PRESSURE	
R	RADIATION	RECORDER	RECORDER
S	SPEED	SWITCH	SWITCH
T	TEMPERATURE	TRANSMITTER	TRANSMITTER
V	VIBRATION		VALVE
W	WEIGHT		
X	SMOKE	TEST	
Z	TIME		

INSTRUMENT SYMBOLS

- LOCALLY MOUNTED INSTRUMENT
- CONTROL BOARD MOUNTED INSTRUMENT
- ANALOG COMPUTER INPUT
- CONTROL BOARD MOUNTED INSTRUMENT WITH TWO VARIABLES
- E / P — ELECTRIC PNEUMATIC

LINE SYMBOLS

- PRIMARY PIPING & DUCTWORK
- SIGNAL OR CONTROL AIR
- INSTRUMENT AIR SUPPLY
- ELECTRICAL LEADS
- CAPILLARY TUBING

FLOW DEVICES

NOZZEL, ORIFICE, IN LINE ROTATING, IN LINE DISPLACE-MENT, FLAP TYPE SIGHT GLASS

DIGITAL ALARMS

LAH 18 — DL AN

DL– TO DATA LOGGER (COMPUTER)

AN– TO STATION ANNUNCIATOR

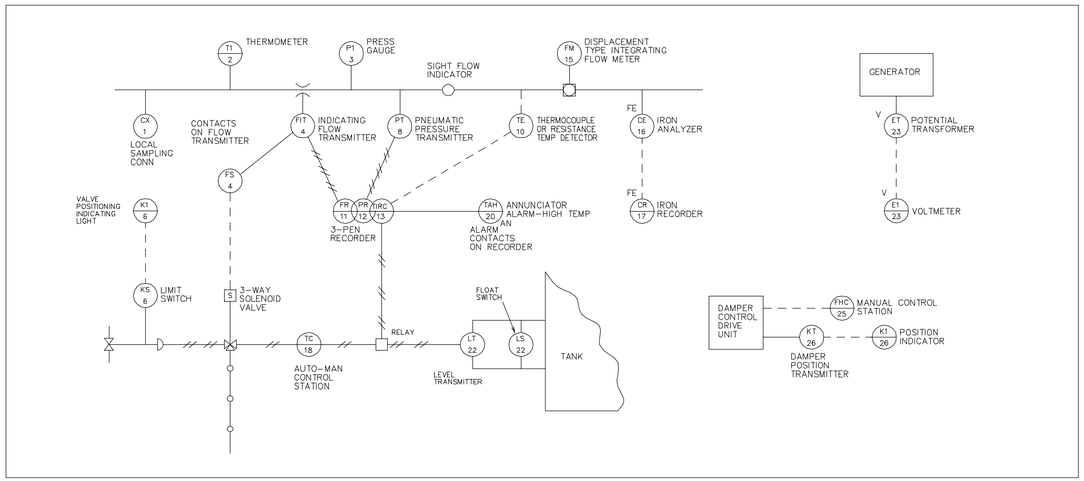

SAMPLING			
SAMPLING DEVICES OR INSTRUMENTS SHALL BE IDENTIFIED BY THE LETTER "C" (CONCENTRATION) WITHIN THE CIRCLE AND BY THEIR RESPECTIVE CHEMICAL SYMBOLS OUTSIDE THE CIRCLE. CHEMICAL SYMBOLS MAY BE ELIMINATED FOR TEST CONNECTIONS ASSOCIATED WITH VARIOUS SAMPLES.			
SYMBOL	SAMPLE	SYMBOL	SAMPLE
O_2	OXYGEN	C	CONDUCTIVITY
CO	CARBON MONOXIDE	pH	
CO_2	CARBON DIOXIDE	Na	SODIUM
H_2	HYDROGEN	NH_3	AMMONIA
Cu	COPPER	N_2H_4	HYDRAZINE
Fe	IRON	COMB.	COMBUSTIBLES
Si	SILICA	T	TURBIDITY OR COLOR

ELECTRICITY			
DEVICES OR INSTRUMENTS ASSOCIATED WITH MEASUREMENT OF ELECTRICAL VARIABLES SHALL BE IDENTIFIED BY APPROPRIATE LETTER OUTSIDE THE CIRCLE. (SEE EXAMPLE).			
LETTER	VARIABLE	LETTER	VARIABLE
A	CURRENT		
V	VOLTAGE		
W	POWER	O	OHMS
WH	WATT HOUR	PH	PHASE
VAR	V-A REACTIVE	S	SYNCHRONISM
F	FREQUENCY		
PF	POWER FACTOR		

TABLE OF ADDITIONS & CHANGES

NO	DATE	DESCRIPTION	REV'D	CHK'D	APP'D
0	01 03 03	INITIAL ISSUE FOR LICENSE RENEWAL	T W	D P C	M A M

MECHANICAL

LICENSE RENEWAL SCOPING DRAWING
MECHANICAL
SYMBOLS
INSTRUMENTATION

THREE MILE ISLAND
AmerGen

SHEET 1 OF 1 LR-302-002 REV 0

DWG.NO. LR-302-002 SH. 1

LICENSE RENEWAL SCOPING DRAWING NOTES:

1. THE LICENSE RENEWAL SCOPING DRAWINGS INDICATE SYSTEMS, STRUCTURES, AND COMPONENTS (SSCs) IN SCOPE FOR LICENSE RENEWAL BY COLORING THE SSCs THAT ARE IN SCOPE. RED IDENTIFIES NON-SAFETY RELATED SSCs THAT ARE IN SCOPE BECAUSE THEY EITHER ARE ATTACHED AND PROVIDE STRUCTURAL SUPPORT TO SAFETY-RELATED SSCs OR THEY HAVE POTENTIAL FOR SPATIAL INTERACTION WITH SAFETY-RELATED SSCs DUE TO POSTULATED LEAKAGE OR SPRAY. GREEN IDENTIFIES THE SSCs THAT ARE REQUIRED TO PERFORM OR SUPPORT INTENDED FUNCTIONS TO MEET SCOPING CRITERIA 10 CFR 54.4(a)(1), 10 CFR 54.4(a)(2) OR 10 CFR 54.4(a)(3).
2. IN SCOPE MECHANICAL SYSTEM PROCESS FLOWPATHS ARE APPROPRIATELY COLORED PER T+RM LR-TM-1007. SUPPLEMENTAL DRAWING INFORMATION, SUCH AS COMPONENT IDENTIFICATION NAMES OR NUMBERS, LINE NUMBERS OR LINE SPECIFICATIONS, CLASS BREAKS, INSTRUMENT LOCATION INFORMATION, ETC., ARE NOT COLORED.
3. THE SITE PLAN LICENSE RENEWAL SCOPING DRAWING (LR-1E-120-01-001) INDENTIFIES THE PLANT STRUCTURES IN SCOPE FOR LICENSE RENEWAL. THE ELECTRICAL SINGLE LINE LICENSE RENEWAL SCOPING DIAGRAM (FIGURE 2.1-2) IS LOCATED IN SECTION 2.1.3.4 OF THE LICENSE RENEWAL APPLICATION. THIS DIAGRAM IDENTIFIES THE MAJOR POWER DISTRIBUTION EQUIPMENT IN SCOPE FOR LICENSE RENEWAL.
   ALL OTHER LICENSE RENEWAL SCOPING DRAWINGS WERE DEVELOPED FROM PLANT FLOW DIAGRAMS AND IDENTIFY THE MECHANICAL SYSTEMS AND EQUIPMENT IN SCOPE FOR LICENSE RENEWAL.
4. INSTRUMENT TUBING, UP TO AND INCLUDING THE ASSOCIATED INSTRUMENTS CONNECTED TO THE IN SCOPE PRESSURE BOUNDARY PIPING, ARE COLLORED AS IN SCOPE EVEN IF THE ASSOCIATED INSTRUMENT IS ACTIVE AND, THEREFORE, NOT SUBJECT TO AGING MANAGEMENT REVIEW.
5. CONTROL SCHEME REPRESENTATIONS THAT APPEAR ON THE LICENSE RENEWAL SCOPING DRAWINGS ARE NOT COLORED AS IN SCOPE. CONTROL SCHEME COMPONENTS IN SCOPE FOR LICENSE RENEWAL ARE EITHER ACTIVE OR ARE INCLUDED WITH ELECTRICAL COMMODITIES FOR APPLICABLE AGING MANAGEMENT REVIEW.
6. LICENSE RENEWAL SCOPING DRAWINGS ARE NUMBERED USING THE CORRESPONDING PLANT FLOW DIAGRAM NUMBERS PREFIXED BY "LR-". CONTINUATION ARROWS APPEARING ON LICENSE RENEWAL SCOPING DRAWING CONTAIN PLANT FLOW DIAGRAM NUMBERS; THEREFORE, IT IS NECESSARY TO PREFIX THE DIAGRAM NUMBER WITH "LR-" TO IDENTIFY THE APPROPRIATE INTERFACING LICENSE RENEWAL DRAWING.
7. SYSTEM BOUNDARIES BETWEEN IN SCOPE SYSTEMS ARE IDENTIFIED WITH BOUNDARY FLAGS ON LICENSE RENEWAL SCOPING DRAWINGS. THE LICENSE RENEWAL SYSTEMS TABLE (SHOWN ON THIS DRAWING) IDENTIFIES THE LICENSE RENEWAL SYSTEM NAMES AND CORRESPONDING SYSTEM CODES USED WITH SYSTEM BOUNDARY FLAGS. THE BOUNDARY FLAG DETAIL SHOWN ON THIS DRAWING PROVIDES A TYPICAL EXAMPLE OF A LICENSE RENEWAL SYSTEM BOUNDARY FLAG.
8. BOUNDARY FLAGS MAY NOT BE INCLUDED IN THE FOLLOWING CASES WHERE THE BOUNDARY IS:
   A. AN INTERFACE BETWEEN A MECHANICAL PIPING SYSTEM AND THE REACTOR VESSEL. IN THIS CASE, THE INTERFACE OCCURS WHERE THE SYSTEM CONNECTS TO THE REACTOR VESSEL NOZZLE.
   B. AN INTERFACE BETWEEN A PNEUMATIC AIR SUPPLY AND AN AIR-OPERATED VALVE ACTUATOR.
   C. AN INTERFACE BETWEEN MECHANICAL SYSTEMS AND STRUCTURES, SUCH AS BUILDING OR WALL PENETRATIONS, PRIMARY CONTAINMENT PENETRATIONS, OR PENETRATIONS OF THE MAIN VENTILATION STACK.
   D. AN INTERFACE BETWEEN A MECHANICAL SYSTEM AND FLOOR OR EQUIPMENT DRAIN. IN THIS CASE, THE INTERFACE IS IDENTIFIED WITH TEXT OR BY USE OF THE DRAIN SYMBOL.
9. SOME LICENSE RENEWAL SCOPING DRAWINGS SHOW INTERFACING SYSTEMS AND EQUIPMENT THAT IS NOT CONSIDERED PART OF THE PRIMARY SYTEM DEPICTED ON THE DRAWING. THIS INFORMATION IS PROVIDED TO MAKE THE DRAWINGS EASIER TO UNDERSTAND. THE INTERFACING SYSTEMS AND EQUIPMENT ARE CONSIDERED BACKGROUND INFORMATION BECAUSE THEY ALSO APPEAR ON THEIR OWN RESPECTIVE SCOPING DRAWINGS.
10. SCOPING OF PIPING INSULATION IS NOT SHOWN ON THE LICENSE RENEWAL SCOPING DRAWINGS. IN SCOPE INSULATION IS IDENTIFIED IN THE LICENSE RENEWAL APPLICATION.
11. SOLENOID VALVES THAT ARE IN SCOPE FOR LICENSE RENEWAL, BUT DO NOT HAVE A PASSIVE PRESSURE BOUNDARY FUNCTION, WILL NOT BE COLORED. THIS AVOIDS CONFUSION, AS THE INTERCONNECTING TUBING IN THESE APPLICATIONS IS NOT IN SCOPE.
12. IN MANY CASES, THE LICENSE RENEWAL SCOPING DRAWINGS DO NOT PROVIDE THE LEVEL OF DETAIL TO SHOW ALL INSTRUMENT VALVES, INCLUDING ROOT VALVES, DRAIN OR VENT VALVES, BLOCK VALVES, EQUALIZATION VALVES, ETC. FOR INSTRUMENTATION ASSOCIATED WITH PROCESS PIPING IN SCOPE FOR LICENSE RENEWAL, THESE INSTRUMENT VALVES ARE ALSO IN SCOPE EVEN THOUGH NOT EXPLICITLY IDENTIFIED ON THE LICENSE RENEWAL SCOPING DRAWINGS.
13. THE SCOPING OF INSTRUMENT & CONTROL AIR SYSTEM IS IDENTIFIED ON THE INSTRUMENT & CONTROL AIR SYSTEM DRAWINGS. WHEN PORTIONS OF INSTRUMENT & CONTROL SYSTEM SHOW ON OTHER SYSTEM DRAWINGS, IT IS SHOWN FOR INFORMATION ONLY.

LICENSE RENEWAL SYSTEMS

LICENSE RENEWAL SYSTEMS	SYSTEM CODE	SCOPING DRAWING REFERENCE – **PRIMARY SYSTEM DRAWINGS IN BOLD** DRAWING NUMBER SUFFIX (Sh. 1, –2, ETC.) INDICATES SHEET NUMBERS FOR MULTIPLE SHEET DRAWINGS
AUXILIARY AND FUEL HANDLING BUILDING VENTILATION SYSTEM	AFBV	LR-302-610, **LR-302-831, LR-302-833 Sh. 1, LR-302-833 Sh. 2, LR-302-841**
AUXILIARY STEAM SYSTEM	AS	LR-302-011, LR-302-042, **LR-302-051, LR-302-052,** LR-302-102, LR-302-121, LR-302-141, LR-302-165, LR-302-171, **LR-302-175,** LR-302-231 SH.2, LR-302-690, LR-302-692, LR-302-693
CIRCULATING WATER SYSTEM	CW	LR-302-132, **LR-302-201**, LR-302-202, LR-302-204
CLOSED CYCLE COOLING WATER SYSTEM	CCCW	LR-302-101, LR-302-113, LR-302-163, LR-302-172, LR-302-175, LR-302-181, **LR-302-221,** LR-302-231 SH.2, LR-302-302 SH.1, LR-302-305, **LR-302-610**, LR-302-611, LR-302-620, LR-302-630, LR-302-640, LR-302-641, LR-302-645, LR-302-650, LR-302-652, LR-302-660, LR-302-662, LR-302-692, LR-302-841, LR-302-842 SH.2, LR-302-845, LR-302-846
CONDENSATE SYSTEM	CO	LR-302-041, LR-302-042, LR-302-051, LR-302-052, LR-302-081, LR-302-082, **LR-302-101, LR-302-102, LR-302-106,** LR-302-111, LR-302-131, LR-302-141, LR-302-159, LR-302-162, **LR-302-171, LR-302-172,** LR-302-175, LR-302-221, LR-302-281, LR-302-308, LR-302-352, LR-302-610
CONDENSERS & AIR REMOVAL SYSTEM	CAR	LR-302-011, LR-302-032, LR-302-042, LR-302-081, LR-302-101, LR-302-102, LR-302-111, LR-302-112, LR-302-121, **LR-302-131, LR-302-132,** LR-302-141, LR-302-196, LR-302-201, LR-302-719
CONTAINMENT ISOLATION SYSTEM	CI	LR-302-011, LR-302-101, LR-302-196, LR-302-650, LR-302-661, LR-303-669, LR-302-670, LR-302-692, **LR-302-708**, LR-302-711, LR-302-720, LR-302-721, LR-302-722, LR-302-725, LR-302-831
CONTROL BUILDING VENTILATION SYSTEM	CBV	LR-320-610, LR-302-708, LR-302-831, **LR-302-842 Sh. 1, LR-302-842 Sh. 2, LR-302-842 Sh. 3, LR-302-847, LR-302-850**
CORE FLOODING SYSTEM	CF	LR-302-640, LR-302-690, LR-302-694, LR-302-670, LR-302-661, **LR-302-711,** LR-302-720
CRANES AND HOISTS	CH	NOT APPLICABLE
DECAY HEAT REMOVAL SYSTEM	DHR	**LR-302-640, LR-302-641,** LR-302-645, LR-302-650, LR-302-661, LR-302-711, LR-302-712, LR-302-719
DIESEL GENERATOR BUILDING VENTILATION SYSTEM	DGBV	**LR-302-844**, LR-302-881
EMERGENCY DIESEL GENERATORS AND AUXILIARY SYSTEMS	EDGA	LR-302-283, **LR-302-351**, LR-302-353, LR-302-354
EMERGENCY FEEDWATER SYSTEM	EF	LR-302-011, LR-302-032, **LR-302-082**, LR-302-101, LR-302-196, LR-302-273, LR-302-611
EXTRACTION STEAM SYSTEM	ES	LR-302-011, **LR-302-041, LR-302-042, LR-302-043**, LR-302-051, LR-302-081, **LR-302-111, LR-302-112, LR-302-121,** LR-302-141, LR-302-162, LR-302-163, LR-302-221
FEEDWATER SYSTEM	FW	LR-302-011, LR-302-032, LR-302-041, LR-302-042, **LR-302-081**, LR-302-101, LR-302-102 Sh. 1, LR-302-111, LR-302-112, LR-302-121, LR-302-131, LR-302-141, LR-302-196, LR-302-221, LR-302-268, LR-302-280 Sh. 1, LR-302-280 Sh. 2, LR-302-281, LR-302-719
FIRE PROTECTION SYSTEM	FP	LR-302-169, LR-302-221, **LR-302-231 Sh. 1, LR-302-231 Sh. 2, LR-302-231 Sh. 3, LR-302-231 Sh. 4, LR-302-231 Sh. 5, LR-302-233, LR-302-234,** LR-302-357, LR-302-611, LR-302-652, LR-302-842 Sh.1, LR-302-848
FUEL HANDLING AND FUEL STORAGE SYSTEM	FHS	**LR-302-630**
FUEL OIL SYSTEM	FO	LR-302-051, **LR-302-283,** LR-302-351
HYDROGEN MONITORING	HM	**LR-302-674**
INSTRUMENT AND CONTROL AIR SYSTEM	ICA	LR-302-032, LR-302-051, LR-302-081, LR-302-106, LR-302-181, LR-302-203, LR-302-221, LR-302-268, LR-302-269, LR-302-270, LR-302-271, LR-302-272, **LR-302-273,** LR-302-275, LR-302-276, LR-302-277 Sh. 1-13, LR-302-278, LR-302-279 Sh. 1-11, LR-302-669, LR-302-712, LR-302-721,
INTAKE SCREEN AND PUMP HOUSE VENTILATION SYSTEM	ISPV	**LR-302-844**
INTERMEDIATE BUILDING VENTILATION SYSTEM	IBV	**LR-302-842 SH. 2**
LIQUID GAS SAMPLING SYSTEM	LGS	LR-302-081, LR-302-101, LR-302-102, LR-302-113, LR-302-172, LR-302-175, **LR-302-181, LR-302-182,** LR-302-221, **LR-302-671,** LR-302-719
MAIN GENERATOR AND AUXILIARY SYSTEM	MGA	**LR-302-303, LR-302-304**
MAIN STEAM SYSTEM	MS	**LR-302-011, LR-302-012, LR-302-032,** LR-302-041, LR-303-052, LR-302-111, **LR-302-113, LR-302-121,** LR-302-141, LR-302-196, LR-302-221, LR-302-302 SH.2, LR-302-719
MAKEUP AND PURIFICATION SYSTEM (HIGH PRESSURE INJECTION)	MUP	LR-302-620, LR-302-630, LR-302-650, **LR-302-660,** LR-302-661, LR-302-662, **LR-302-669, LR-302-670,** LR-302-671, LR-302-691, LR-302-692, LR-302-711, LR-302-719
MISCELLANEOUS FLOOR AND EQUIPMENT DRAINS SYSTEM	MFED	LR-302-011, LR-302-159, **LR-302-165, LR-302-166,** LR-302-172, LR-302-196, LR-302-202, LR-302-352, LR-302-660, LR-302-661, LR-302-671, LR-302-690, LR-302-693, LR-302-719
OPEN CYCLE COOLING WATER SYSTEM	OCCW	LR-302-201, **LR-302-202, LR-302-203,** LR-302-610, LR-302-620, LR-302-645, LR-302-844
PRIMARY CONTAINMENT HEATING AND VENTILATION SYSTEM	PCHV	LR-302-202, LR-302-203, LR-302-610, LR-302-611, **LR-302-708,** LR-302-719, LR-302-831
RADIATION MONITORING SYSTEM	RM	LR-302-131, LR-302-721, **LR-302-730,** LR-302-833 Sh.1, LR-302-833 Sh.2, LR-302-841, LR-302-842
RADWASTE SYSTEM	RW	LR-302-011, LR-302-106, LR-302-196, LR-302-352, LR-302-630, LR-302-640, LR-302-650, LR-302-660, LR-302-669, LR-302-670, LR-302-690, **LR-302-691, LR-302-692, LR-302-693, LR-302-694,** LR-302-695 Sh. 1, LR-302-695 Sh. 2, LR-302-696, LR-302-697, LR-302-711, LR-302-719
REACTOR BUILDING SPRAY SYSTEM	RBS	LR-302-669, **LR-302-712,** LR-302-719
REACTOR BUILDING SUMP AND DRAIN SYSTEM	RBSD	LR-302-196, LR-302-660, **LR-302-719**, LR-302-831
REACTOR COOLANT SYSTEM	RCS	LR-302-620, LR-302-640, **LR-302-650**, LR-302-651, LR-302-652, LR-302-660, LR-302-661, LR-302-690, LR-302-719
REACTOR VESSEL	RV	LR-302-620, **LR-302-650,** LR-302-711
REACTOR VESSEL INTERNALS	RVI	**SEE UFSAR FIGURES 3.2-44, 3.2-49, 3.2-50**
SERVICE BUILDING CHILLED WATER SYSTEM	SBCW	**LR-302-846**
SPENT FUEL COOLING SYSTEM	SFC	**LR-302-630**, LR-302-640, LR-302-669, LR-302-670
STATION BLACKOUT AND UPS DIESEL GENERATOR SYSTEM	SBO	LR-302-202, **LR-302-355, LR-302-356, LR-302-357, LR-302-358, LR-302-359,** LR-302-881
STEAM GENERATOR	SG	**LR-302-011, LR-302-032,** LR-302-082, LR-302-196, **LR-302-650**
STEAM TURBINE AND AUXILIARY SYSTEMS	STA	**LR-302-011**, LR-302-041, LR-302-042, LR-302-043, LR-302-121, LR-302-141, LR-302-221, LR-302-291, **LR-302-302 Sh. 1, LR-302-302 Sh 2**, LR-302-305, LR-302-306, LR-302-307, LR-302-308
WATER TREATMENT AND DISTRIBUTION SYSTEM	WTD	LR-302-051, LR-302-101, LR-302-106, **LR-302-151, LR-302-158 Sh. 1, LR-302-158 Sh. 2, LR-302-158 Sh. 3, LR-302-158 Sh. 4,** LR-302-162, LR-02-163, LR-302-169, LR-302-171, LR-302-172, LR-302-174, LR-302-182, LR-302-196, LR-302-201, LR-302-203, LR-302-221, LR 302-231 SH.1
SITE PLAN		**LR-1E-120-01-001**

NOTES:

1. THIS DRAWING IS BASED ON DRAWING 302-003 REVISION 37.

COMPONENT ABBREVATIONS

A	CRANE, HOISTS, MONORAILS, ELEVATORS AND MECHANICAL TRANSPORTATION
B	BOILER
C	COOLER OR HEAT EXCHANGER
D	DRAIN
E	EXHAUSTER OR FAN
F	FILTER
G	GAS ANALYZER
H	STEAM GENERATOR
J	FEED WATER HEATER
K	DEMINERALIZER
L	LUBE OIL CONDITIONER
M	MIXER
N	MANIFOLD
P	PUMP OR COMPRESSOR
Q	DRYER
R	RELIEF VALVE
S	SAMPLE OR STRAINER
T	TANK
U	TURBINE
V	VALVE
Y	MISCELLEANOUS BAILER, WASTE DRUMMING EQUIPMENT, SPENT FUEL STORAGE RACKS.
Z	EVAPORATOR
ES	DENOTES ENGINEERED SAFEGUARD
SP	DENOTES SECONDARY PLANT

EXAMPLE

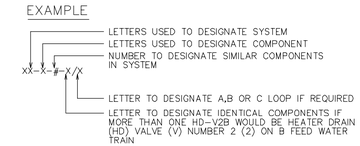

TYPICAL BOUNDARY FLAG DETAIL

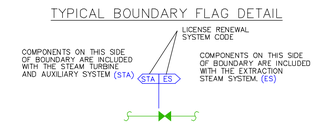

TABLE OF ADDITIONS & CHANGES

NO	DATE	DESCRIPTION	REV'D	CHK'D	APP'D
0	01 03 08	INITIAL ISSUE FOR LICENSE RENEWAL	TW	DPC	MAM

MECHANICAL

LICENSE RENEWAL DRAWING
COMPONENT & SYSTEM
IDENTIFICATION INDEX

THREE MILE ISLAND
AmerGen

SHEET 1 OF 1 LR-302-003 0

DWG.NO. LR-302-003 SH. 1

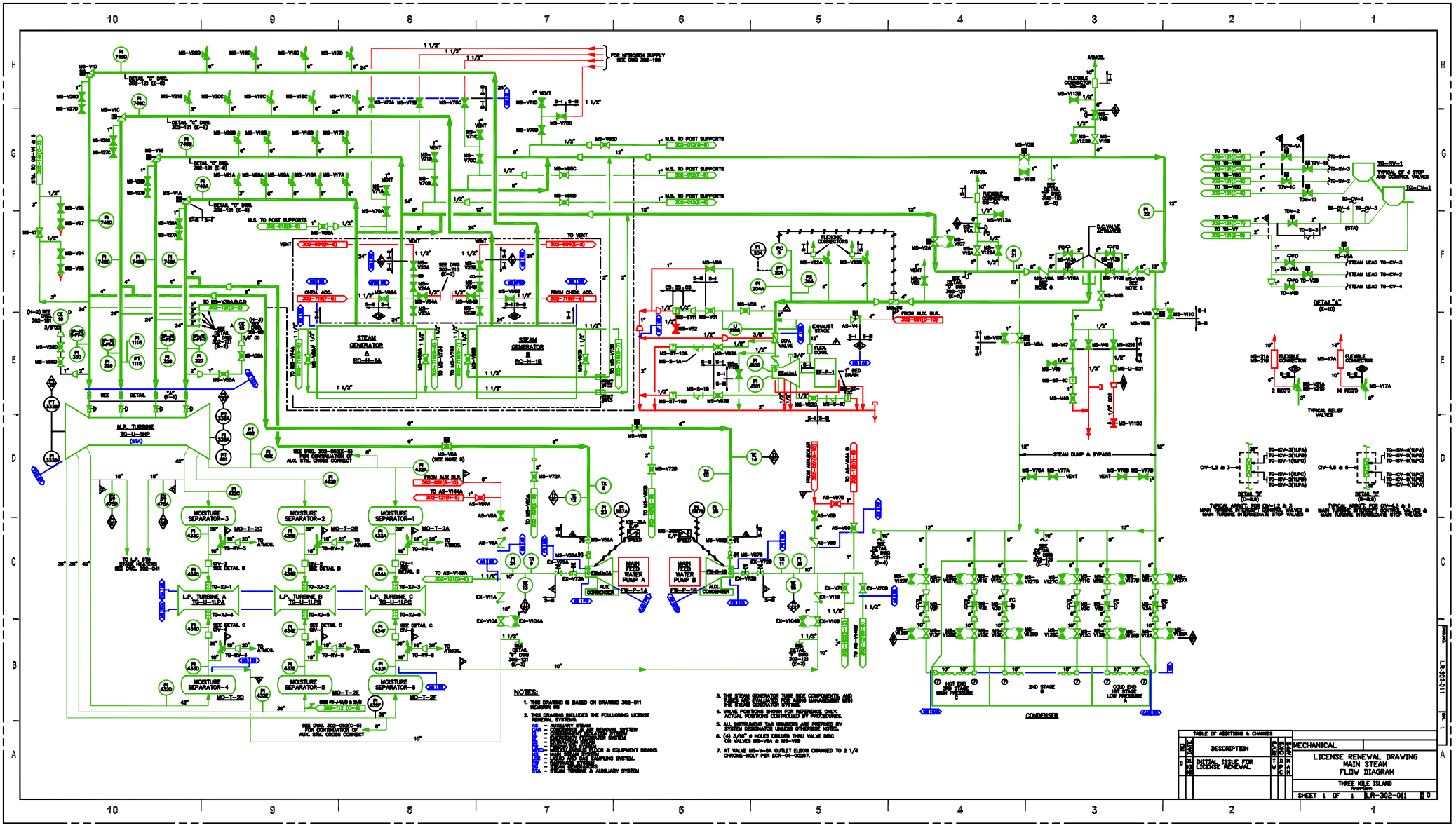
STEAM GENERATOR A RC-H-1A
STEAM GENERATOR B RC-H-1B
H.P. TURBINE TG-U-1HP
MOISTURE SEPARATOR-1
MOISTURE SEPARATOR-2
MOISTURE SEPARATOR-3
MOISTURE SEPARATOR-4
MOISTURE SEPARATOR-5
MOISTURE SEPARATOR-6
L.P. TURBINE A TG-U-1LPA
L.P. TURBINE B TG-U-1LPB
L.P. TURBINE C TG-U-1LPC
MAIN FEED WATER PUMP A
MAIN FEED WATER PUMP B
CONDENSER
HOT END 3RD STAGE HIGH PRESSURE C
2ND STAGE B
COLD END 1ST STAGE LOW PRESSURE A
STEAM DUMP & BYPASS
DETAIL "A" (E-10)
TYPICAL RELIEF VALVES
TYPICAL STOP AND CONTROL VALVES
NOTES:
1. THIS DRAWING IS BASED ON DRAWING 302-011 REVISION 00
2. THIS DRAWING INCLUDES THE FOLLOWING LICENSE RENEWAL SYSTEMS:
MS = MAIN STEAM
CD = CONDENSATE
FW = FEEDWATER
EX = EXTRACTION STEAM
AS = AUXILIARY STEAM
SV = STEAM VENT
TD = TURBINE DRAINS
SD = SHUTDOWN
SG = STEAM GENERATOR & EQUIPMENT DRAINS
SP = SAMPLE
CS = CHEMICAL SAMPLING SYSTEM
VT = VENT
SB = STEAM BLOWDOWN
SA = STEAM SAMPLING
TS = STEAM TURBINE & AUXILIARY SYSTEM
3. THE STEAM GENERATOR TUBE SIDE COMPONENTS AND TUBES ARE CONSIDERED FOR AGING MANAGEMENT WITH THE STEAM GENERATOR SYSTEM.
4. VALVE POSITIONS SHOWN FOR REFERENCE ONLY. ACTUAL POSITIONS CONTROLLED BY PROCEDURES.
5. ALL INSTRUMENT TAP NUMBERS ARE PREFIXED BY STATION DESIGNATION UNLESS OTHERWISE NOTED.
6. (4) 3/16" ø HOLES DRILLED THRU VALVE DISC ON VALVES MS-V9A & MS-V9B
7. AT VALVE MS-V-5A OUTLET ELBOW CHANGED TO 2 1/4 CHROME-MOLY PER ECR-04-00397.
TABLE OF ADDITIONS & CHANGES
NO | DATE | DESCRIPTION | DRAWN | CHECKED | APPROVED
0 | 09/28/04 | INITIAL ISSUE FOR LICENSE RENEWAL | T.V. | T.S.C. | R.K.H.
MECHANICAL
LICENSE RENEWAL DRAWING
MAIN STEAM
FLOW DIAGRAM
THREE MILE ISLAND
SHEET 1 OF 1 LR-302-011 0

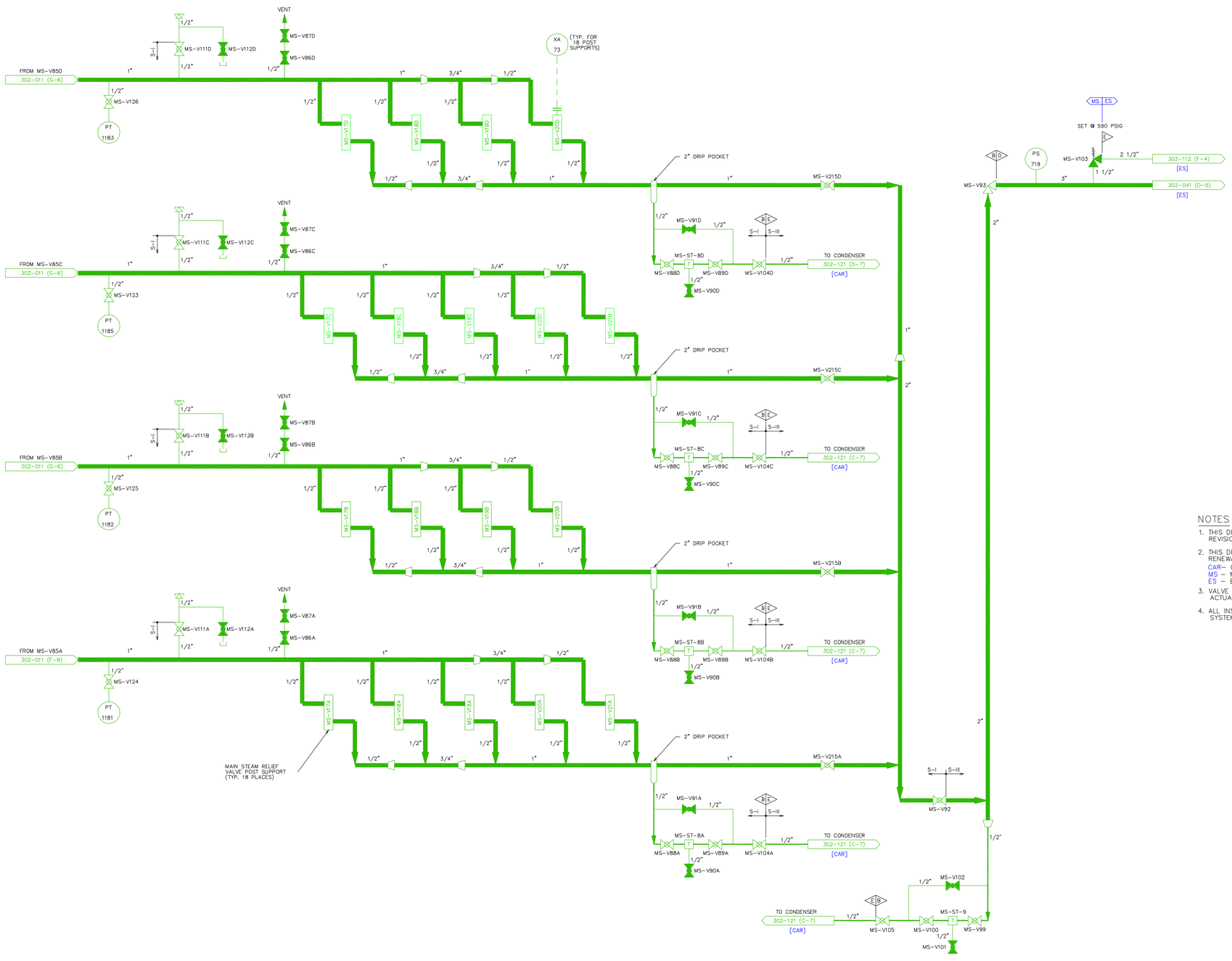

NOTES

1. THIS DRAWING IS BASED ON DRAWING 302-012 REVISION 10.
2. THIS DRAWING INCLUDES THE FOLLOWING LICENSE RENEWAL SYSTEMS:
   CAR– CONDENSER & AIR REMOVAL SYSTEM
   MS – MAIN STEAM
   ES – EXTRACTION STEAM
3. VALVE POSITIONS SHOWN FOR REFERENCE ONLY ACTUAL POSITIONS CONTROLLED BY PROCEDURES.
4. ALL INSTRUMENT TAG NUMBERS ARE PREFIXED BY SYSTEM DESIGNATOR UNLESS OTHERWISE NOTED.

TABLE OF ADDITIONS & CHANGES

NO	DATE	DESCRIPTION	REV'D	CHK'D	APP'D
0	01 03 08	INITIAL ISSUE FOR LICENSE RENEWAL	T W	D P C	M A M

MECHANICAL

LICENSE RENEWAL DRAWING
MAIN STEAM TO RELIEF VALVE POST SUPPORTS
FLOW DIAGRAM

THREE MILE ISLAND
AmerGen

SHEET 1 OF 1 LR-302-012 REV 0

DWG.NO. LR-302-012 SH. 1